REVISIONS				
ZONE	REV	DESCRIPTION	DATE	APPROVED

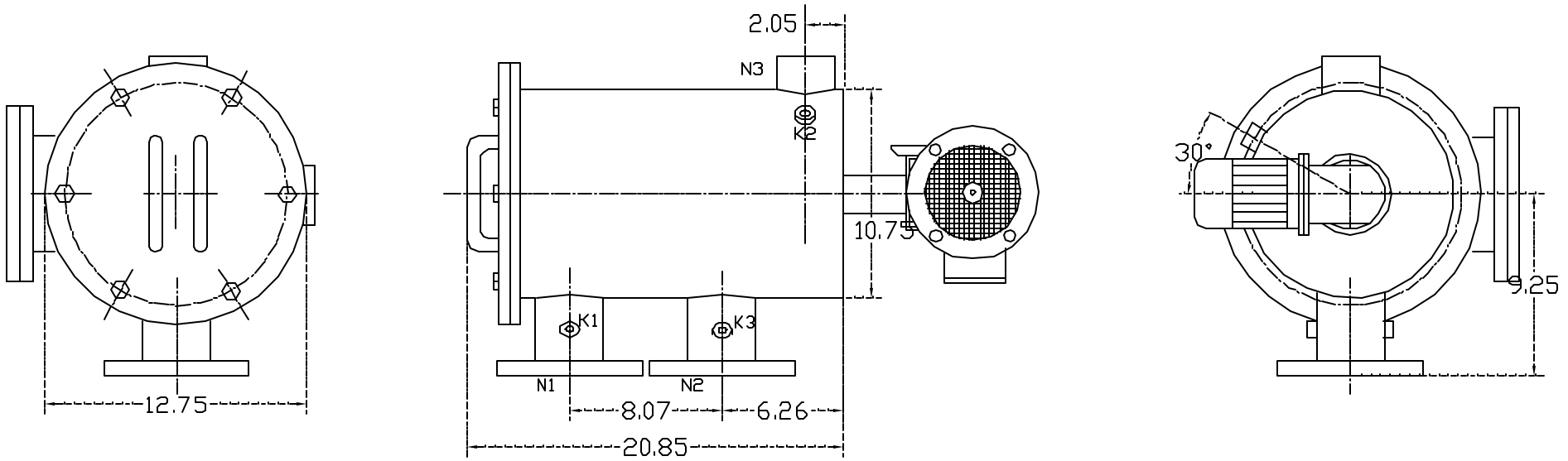

TECHNICAL DATA	
Flow Rate	Max. 175/200* gpm
Screen Size	___ Micron
Screen Area	0.5/0.6* sq.ft.
Working Temp.	150 deg. F
Working Pressure	150 PSI
Empty Weight	120 lbs.
Full Weight	170 lbs.

* Denotes High Performance Screen

NOZZLE	CONNECTION	TYPE OF CONNECTION	SIZE	RATING
K1	Hi. Press. Conn.	Threaded	1/4" NPT(2)	
K2	Hydraulic Conn.	Threaded	1/4" NPT	
K3	Low Press. Conn.	Threaded	1/4" NPT(2)	
N1	Inlet	Flanged	3" ASA	150 lbs. F.F.
N2	Outlet	Flanged	3" ASA	150 lbs. F.F.
N3	Flushoutlet	Threaded	2" NPT(2)	

UNLESS OTHERWISE SPECIFIED
DIMENSIONS ARE IN INCHES
TOLERANCES
DECIMALS .XX ± .05 .XXX ± .01
ANGULAR ± 0.5 DEG.

DRAWN Daniel Stenberg DATE 5-26-06
CHECKED
DESIGN

AUTOMATIC FILTERS, INC.
2672 S. LA CIENEGA BLVD.
LOS ANGELES, CA 90034
(310) 839-2828 FAX (310) 839-6878

TITLE HDL3-P

SIZE A | DWG NO. HDL3-P | REV 0

SCALE 1:6 | SHEET OF